F.B. PROCÉDÉS

SCREW CONVEYOR
Type VTP

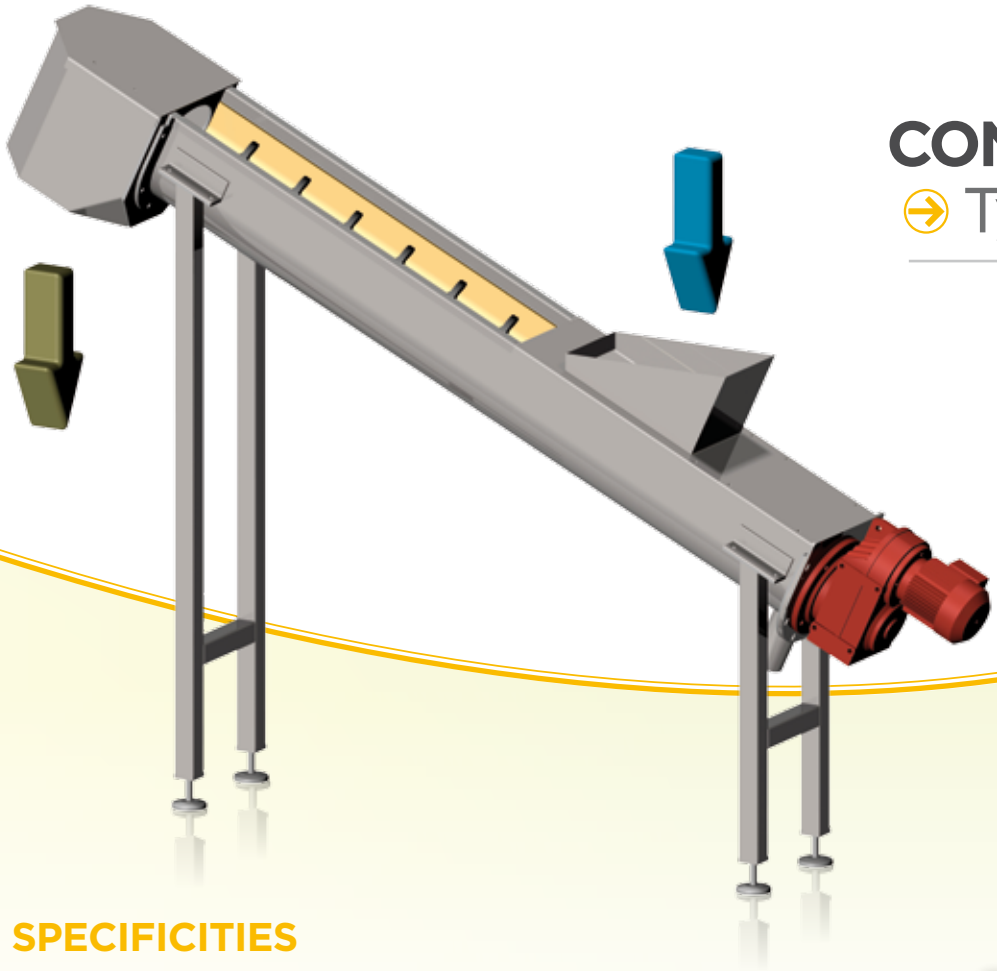

SPECIFICITIES

To transport the bar screen waste to a given distance from the bar screen.

Custom built (slope, length, intake hopper dimensions, etc.).

Can be used with our entire range of bar screens.

Straightforward design, low operating costs and easy maintenance.

TECHNICAL CHARACTERISTICS

	VTP 200	VTP 250
Max. rate (m^3/h)	1	2
Max. slope (°)	25	20
Max. length (mm)	8,000	10,000
Construction	304L or 316L stainless steel	
Electrical protection	Current controller	

1 • INTAKE HOPPER
(Custom built)

2 • FILTRATE OUTPUT
(DN65)

3 • OUTPUT HOPPER

4 • CONVEYING AREA

	VTP200	VTP250
Ø of trough (mm):	225	274
Ø of screw thread (mm):	200	250
Flat section:	70x15	80x20
Wear strip:	HD500 6 mm thick	

5 • GEARED MOTOR (SEW)

	VTP200	VTP250
Power (KW):	0.37 to 1.10	0.55 to 1.50

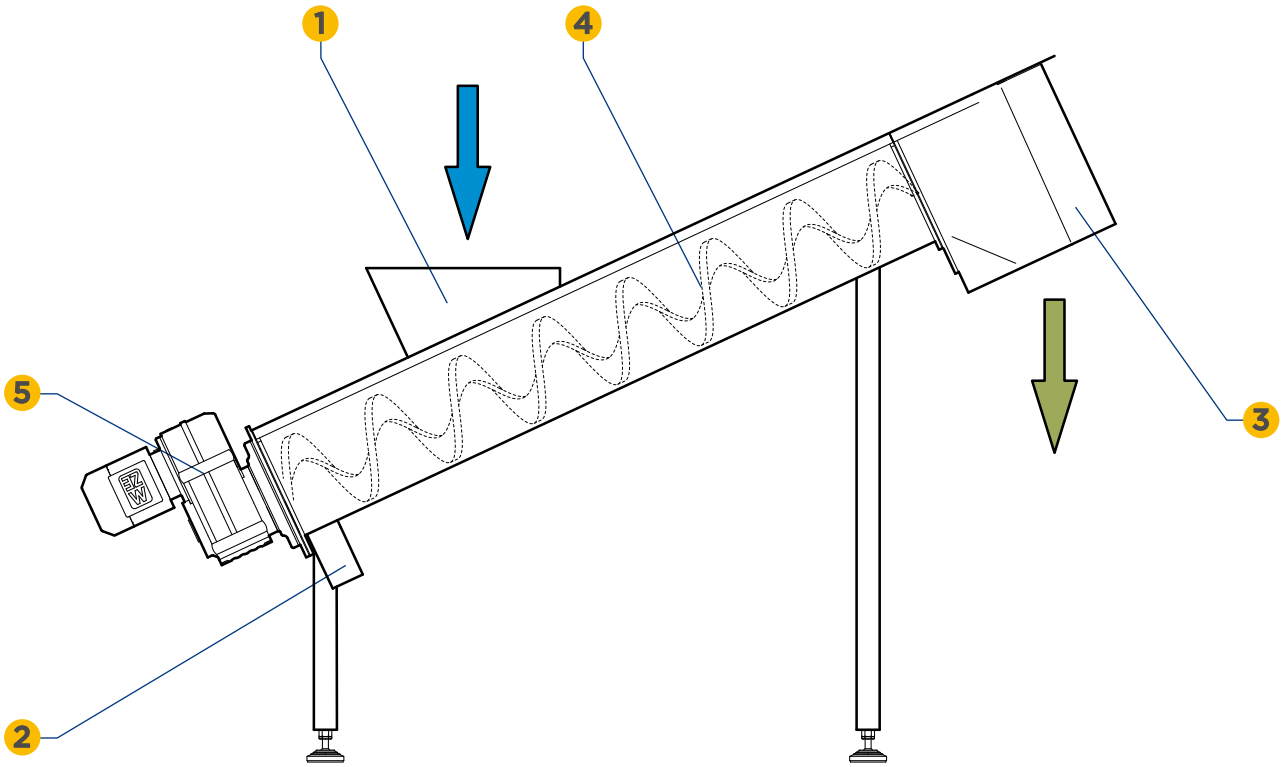

OPERATING PRINCIPLE

Waste is dumped in the conveying area through the intake hopper, adapted to the equipment which supplies it. The rotation of the Archimedes shaftless screw directs the waste to the output hopper. The drained water in the conveying area is recovered by a tube welded under the screw on the motor side. The filtrates can also be sent to the channel or station.

OPTIONS

Extension of output hopper, waste cleaning ramp with manual valve and electro-valve, etc.

P.A. Maison Neuve - 6, rue Marcel Dassault - 44986 SAINTE-LUCE/LOIRE Cedex FRANCE - Tel : 00 33 (0)2 40 25 86 77 - Fax : 00 33 (0)2 40 25 88 47
contact@fbprocedes.fr - www.fbprocedes.com